Aerial Cam Unit

Grade	Working Force [kN (tonf)] 1,000,000 strokes	Working Force [kN (tonf)] 300,000 strokes	Catalog No.	W	θ	Spring Type PS
Yellow	245.0 (25.0)	294.0 (30.0)	VACYL	400	00~70 (5° increments)	GK NGK ISO
Pink	343.0 (35.0)	411.6 (42.0)	VACPL			

ISO: Coil Spring GK: Gas Spring (KALLER)
NGK: Without Gas Spring Parts for spring assembly are included.

Order

Catalog No.	W	–	θ	–	PS	–	Option
VACYL	400	–	10	–	ISO		
VACPL	400	–	10	–	GK		– NF – K

Option

Option Code	Specification
NF	Nitrogen gas not charged.
K	Key attached.

Refer to page 388 for key specification.

■Spring Force & Return Force

● Gas Spring
Yellow, Pink

θ	Spring Force Final Load N	Spring Force Final Load kgf	Return Force N	Return Force kgf
00	27829	2840	37516	3828.2
05	27829	2840	37435	3819.9
10	27829	2840	37349	3811.2
15	27829	2840	37258	3801.9
20	27829	2840	37164	3792.2
25	27829	2840	37065	3782.2
30	27829	2840	36965	3771.9
35	27829	2840	36862	3761.4
40	27829	2840	36758	3750.9
45	27829	2840	36655	3740.3
50	27829	2840	36551	3729.7
55	27829	2840	39757	4056.9
60	27829	2840	43960	4485.7
65	26956	2751	48001	4898.0
70	25384	2590	52244	5331.1

● Coil Spring
Yellow, Pink

θ	Spring Force Initial Load N	Spring Force Initial Load kgf	Spring Force Final Load N	Spring Force Final Load kgf	Return Force N	Return Force kgf
00	1745	178.1	13743	1402.4	18926	1931.3
05	1745	178.1	13743	1402.4	18846	1923.0
10	1745	178.1	13743	1402.4	18760	1914.3
15	1745	178.1	13743	1402.4	18669	1905.0
20	1745	178.1	13743	1402.4	18574	1895.3
25	1745	178.1	13743	1402.4	18476	1885.3
30	1745	178.1	13743	1402.4	18375	1875.0
35	1745	178.1	13743	1402.4	18272	1864.5
40	1745	178.1	13743	1402.4	18169	1854.0
45	1745	178.1	13743	1402.4	18065	1843.4
50	1745	178.1	13743	1402.4	17962	1832.8
55	1745	178.1	13743	1402.4	19533	1993.2
60	1745	178.1	13743	1402.4	21599	2204.0
65	1745	178.1	12653	1291.1	22394	2285.1
70	1403	143.2	12911	1317.4	26419	2695.8

■Cam Travel

θ	Travel mm
00	35.4
05	39.0
10	42.8
15	46.6
20	50.7
25	55.0
30	59.7
35	64.9
40	70.7
45	77.5
50	85.6
55	95.9
60	110.0
65	118.3
70	119.9

Copyright © Sankyo Oilless Industry, Inc. All Rights Reserved.

Copyright © Sankyo Oilless Industry, Inc. All Rights Reserved.

■Weight

θ	Total Weight kg	Cam Slider Weight kg	Tool Weight*1 kg
00	205	91	59
05	205	91	59
10	204	91	60
15	203	91	63
20	201	91	64
25	199	91	67
30	198	91	71
35	198	91	76
40	200	91	82
45	203	91	89
50	208	91	89
55	212	95	85
60	213	94	86
65	219	98	82
70	227	103	77

*1 Tool weight is estimated value. Allowable tool weight varies depending on press speed.

■Rear Removal Space

θ	L mm
00	46.9
05	55.7
10	63.0
15	70.7
20	82.9
25	98.6
30	113.6
35	128.5
40	143.1
45	158.4
50	169.2
55	184.3
60	187.1
65	181.2
70	178.1

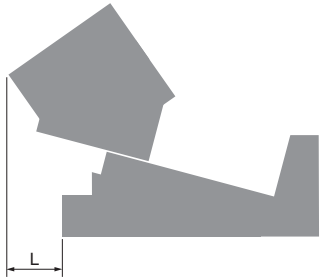

■Working Force Distribution Diagram

The working forces indicated in the mount face distribution diagram are reached by putting the tooling center of gravity within each area for the following pictures.

: Working force (kN) allowed for up to 300,000 strokes
[ ]: Working force (kN) allowed for up to 1,000,000 strokes

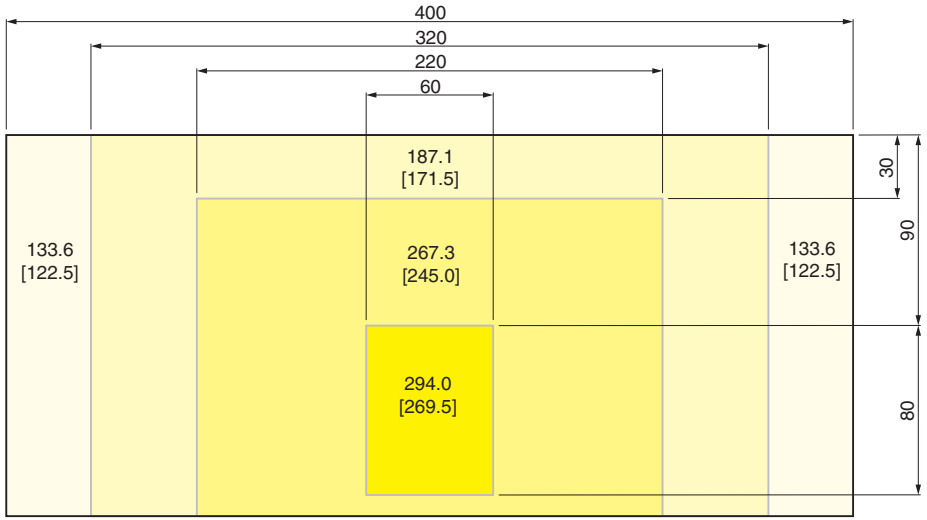

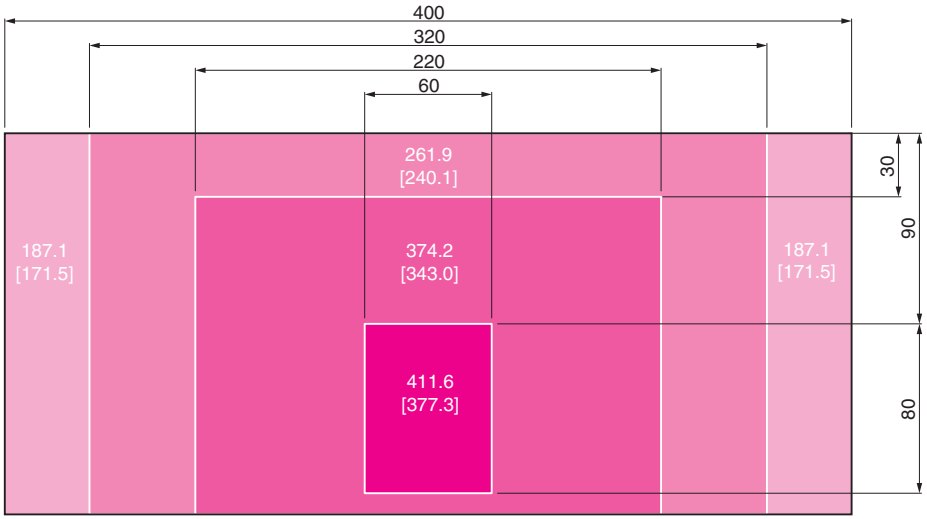

Copyright © Sankyo Oilless Industry, Inc. All Rights Reserved.

Copyright © Sankyo Oilless Industry, Inc. All Rights Reserved.

Aerial Cam Unit

VACYL400
VACPL400

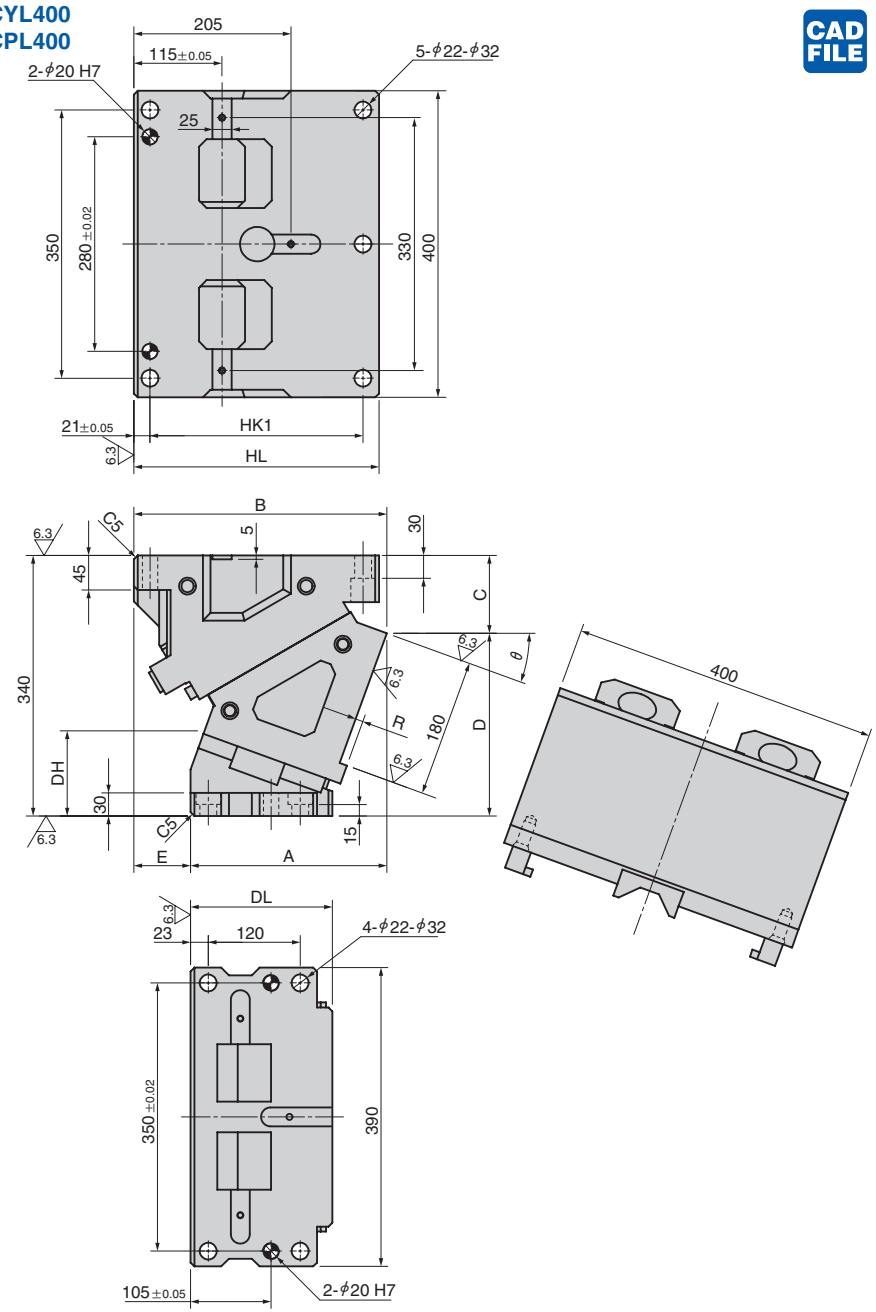

CAD FILE

θ	A	B	C	D	E	HL	HK1	DH	DL	R
00	180.00	303.00	68.00	272.00	123	285	243	71.0		
05	199.13	312.13	77.72	262.28	113	295	253	77.7		
10	218.87	319.87	86.26	253.74	101	305	263	87.0		
15	238.21	327.21	94.59	245.41	89	315	273	97.8		
20	256.18	330.18	101.67	238.33	74	320	278	111.0		
25	272.82	332.82	108.46	231.54	60	325	283	125.4	185	10
30	289.13	334.13	115.95	224.05	45	330	288	140.0		
35	303.16	332.16	127.11	212.89	29	330	288	151.5		
40	325.92	326.92	138.91	201.09	1	330	288	162.8		
45	336.46	317.46	154.33	185.67	-19	325	283	170.8		
50	350.80	308.80	171.35	168.65	-42	325	283	177.3		
55	364.97	299.97	179.42	160.58	-65	325	283	181.8		
60	376.72	295.72	178.36	161.64	-81	325	283	185.6	180	23
65	392.61	298.61	187.08	152.92	-94	325	283	188.6		32
70	409.88	295.88	197.14	142.86	-114	325	283	191.3		40

■Cam Diagram

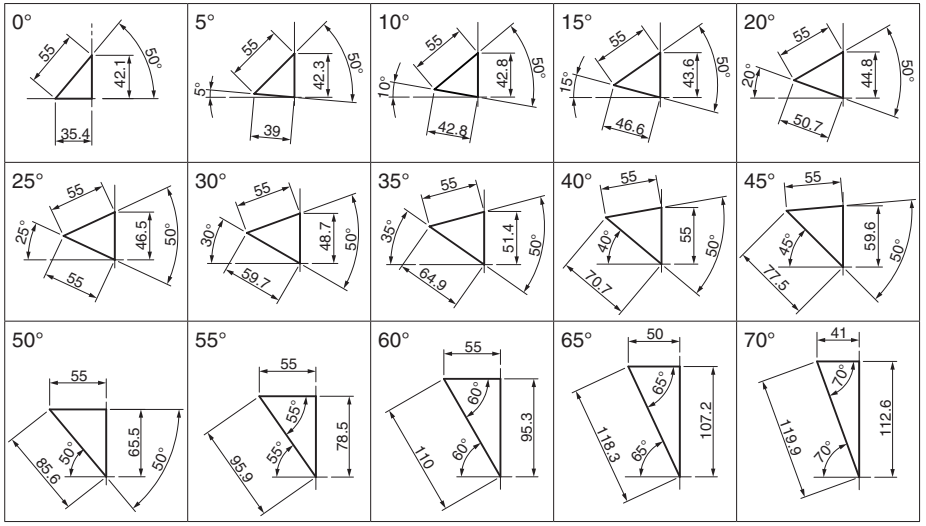

Refer to page 394 for Table of Components.

Copyright © Sankyo Oilless Industry, Inc. All Rights Reserved.

Copyright © Sankyo Oilless Industry, Inc. All Rights Reserved.