Locking Block and Angular Pin

FOR SLIDE CORE

RoHS

LKBA(Bolt Hole Type)

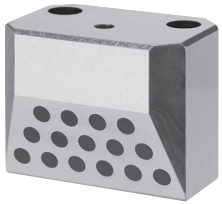

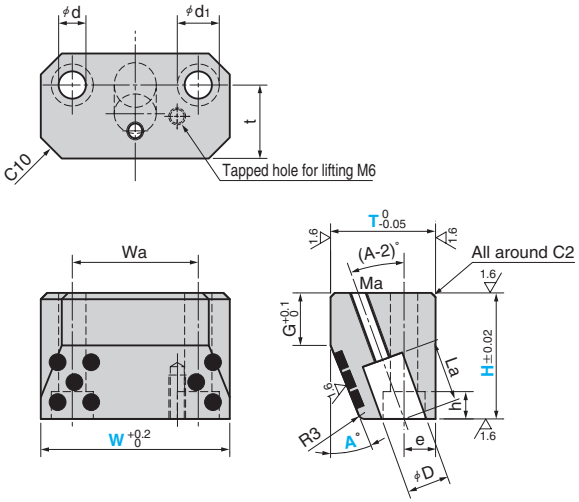

Material : S55C (I C55 A 1055)
with Graphite
Slide Area Induction Hardened
HRC55 or more

G	t	Wa	d	d1	h	e	D	La	Ma	Catalog No.	T	H	W	A
20	28	50	11	17.5	11	12	16	25	M6	LKBA	40	50	75	17°
25	30	50	13	20	13	15	20	30	M8		50	60	75	
		70											100	
30	40	50				20					60	70	75	22°
		70											100	

G	t	Wa	M×Depth	e	D	La	Ma	Catalog No.	T	H	W	A
20	20	50	M10×20	12	16	25	M6	LKBB	40	50	75	17°
25	25	50	M12×24	15	20	30	M8		50	60	75	
		70									100	
30	30	50		20					60	70	75	22°
		70									100	

Order

Catalog No.	T	—	H	—	W	—	A
LKBA	50	—	60	—	100	—	17

LKBB(Tapped Hole Type)

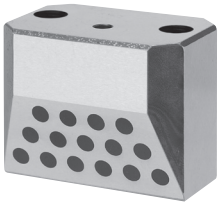

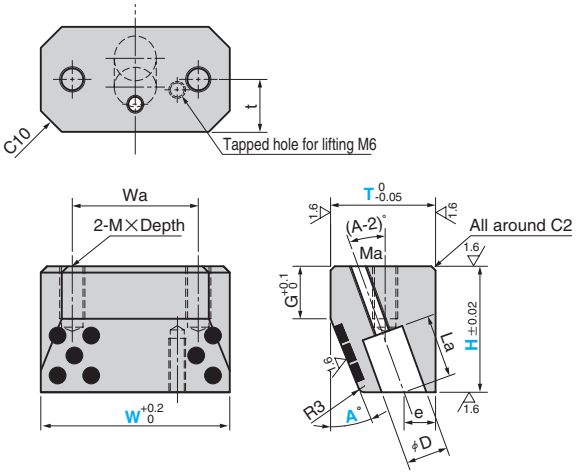

Material : S55C (I C55 A 1055)
with Graphite
Slide Area Induction Hardened
HRC55 or more

■Angular Pin AGPB

RoHS

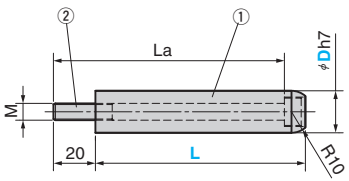

D	h7
16	0 −0.018
20	0 −0.021

①Angular Pin Material : SUJ2 (I B1 A 52100)
Hardness : HRC58～
②Hexagonal Socket Head Bolt Material : SCM435 (I 34CrMo4 A 4137)

M	La	Catalog No.	D	L
6	80	AGPB	16	75
	90			85
8	80		20	75
	90			85

Order

Catalog No.	D	—	L
AGPB	20	—	85

Slide Core Related Parts