Cam Slide Guides

CENTER KEY TYPE

Addition CAD FILE

CGBF (FC with Graphite Type)
CGBS (Steel with Graphite Type)
CGBW (Bronze with Graphite Type)

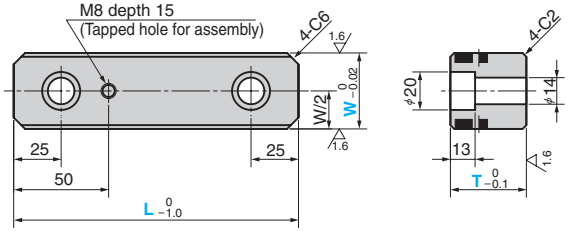

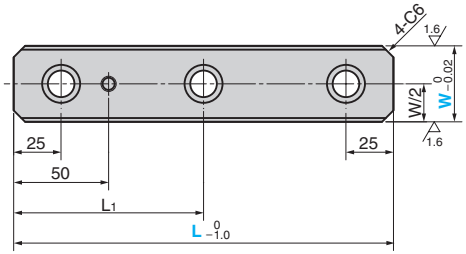

● Only for W=60 and L≧250

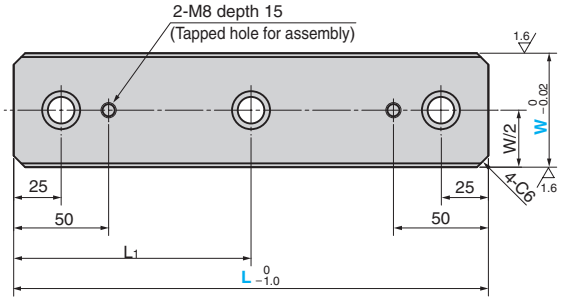

	Material
CGBF	FC250 with Graphite
CGBS	S55C with Graphite
	HRC 40 to 45(S area) Induction Hardened
CGBW	Bronze with Graphite

L1	S	Catalog No.	W	L	T
–	15	CGBF CGBS	30	100	30
–				150	
100				200	
125				250	
150				300	
175				350	
–			40	100	30
–				150	
100				200	
125				250	
150				300	
175				350	
–	20	CGBF CGBS CGBW	40	100	40
–				150	
100				200	
125				250	
150				300	
175				350	
–	25	CGBW	60	100	40
125				250	
150				300	
175				350	

Order

Catalog No.	W	–	L	–	T
CGBF	30	–	150	–	30

■We are ready to accept requests or orders for special parts.